NAME：KX-901 EI transformer coil measuring instrument

I. Overview

This instrument is used for measuring the turns of various types of coils, such as motor windings, generator windings, transformers and transformer coils, relay coils, TV HV/LV convertors, auto ignition coils.

Thanks to the precision sensor and microcomputer circuit produced with the patent technologies, this instrument features the advantages such as high precision, powerful function, low influence on the coil shapes and geometric dimensions, reliable and easy operation. Accuracy values of the measured coils can be easily read from the instrument without any adjustment and calibration to the instrument, which greatly improve the measuring efficiency.

II. Schematic Diagram

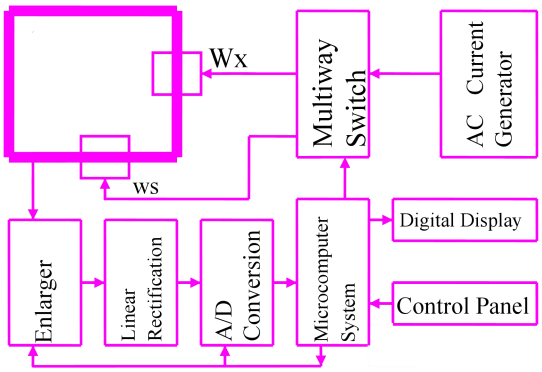

III. Main Technical Index

3.

Specifications of Sensor		Φ2mm	Φ3mm	Φ4mm	Φ6mm	Φ10mm
Measurement Accuracy	0~300 coils	±0 coils				
	301~500 coils	±1 coils				
	501~5000 coils	±0.3%	±0.3%	±0.2%	±0.2%	±0.2%
	5001~20000 coils	--	±0.4%	±0.2%	±0.2%	±0.2%
	20001~60000 coils	--	--	±0.5%	±0.5%	±0.5%
Measuring Range		0~5000 coils	0~20000	0~60000 coils		
Inner Diameter of Measured		＞2mm	＞3mm	4mm	6mm	10mm

Coil					
Height of Measured Coil	≤20mm	≤30mm	≤110mm		
External Diameter of Measured Coil	≤15mm	≤25mm	≤120mm		
Working Power Supply	AC220V±10%， 50Hz±2Hz				
Operational Environment	Environmental Temperature: +5℃~+35℃, Relative Humidity: 85% below				
Overall Dimension	370 x 220 x 110 (mm)				
Weight	Approx. 7kg				

Notes: Coils less than 2000 coils shall be measured at a fast speed and coils greater than 5000 coils shall be measured at a slow speed.
The measure accuracy for coils with special specification will be determined with users through consultation.

IV. Operation

4. 1. Fix measuring transducer
Insert the sensor into the corresponding slot of the right side of the instrument Connect the two measuring traverses (red & black) respectively into the wiring holes on the rear side of the instrument.

4. 2. Connect the Power Supply
Plug the power cord into the power supply socket on the rear side of the instrument and turn on the power switch. Warn up the instrument for 5min after the display is activated.

4. 3. Turn the horizontal tumbler on the measuring sensor counter-clockwise to a desired position (not exceeding 45°) and put the coil to be measured onto the test bar of the sensor. Then reset the horizontal tumbler on the sensor.

4. 4. Measurement

4. 4. 1. Connect the two terminal wires of the coil to be measured respectively with the red and black measuring traverses and make sure the electrical connections are in good condition in order to minimize the effects of contact resistance.

4. 4. 2. Phase Display
When the instrument is working in a continuous measuring mode after being switched on, the

number of the coil turns will be displayed on the screen. The mark "-" which may or may not be shown in front of the value indicates the two different winding direction of the coil.

4. 4. 3. "Measuring speed" Key (there is no "fast" measuring state when KX-9108 measures the resistance)

When the "FAST" lamp is on, the instrument is working in a fast measuring mode (at a measuring speed of approx. 0.35s/time). Press the "MEASURING SPEED" key once again, the "FAST" lamp is off, and the instrument is working in a slow measuring mode (at a measuring speed of approx. 0.84s/time)

4. 4. 4. "Sound select" Key (KX-9108 does not have such function)

Three pilot lamps ("PHASE", "OPEN CIRCUIT" and "MUTE") on the top right of the instrument are used to indicate three sound modes The instrument can be switched among these three sound modes by pressing the "SOUND SELECTION" key. If the "PHASE" lamp is on, the alarm will sound only when the phase mark "-" is displayed on the screen or there is an electric contact error. If the "OPEN CIRCUIT" lamp is on, the alarm will sound only when the coil to be measured has an open circuit or is disconnected or there is an electric contact error. If the "MUTE" lamp is on, the alarm will sound only when there is an electric contact error

4. 5. If the measured coil has an open circuit, or is disconnected or the coil resistance is greater than 50KΩ, the instrument will display "E r r □ r".

4. 6. When there is an electric contact between the coil and the test bar of the sensor, the "ELECTRIC CONTACT" pilot lamp on the instrument will illuminate.

4. 7. If the instrument is exposed to serious electromagnetic interference and can not work normally, make sure to eliminate the interference source before performing any measurement.

V. Precautions

5. 1. Avoid any large electromagnetic interference around the instrument to avoid affecting the accuracy of the instrument.

5. 2. An open circuit inside the coil to be measured may affect the measurement accuracy.

5. 3. While putting the measured coil onto the test bar, make sure the lower end of the windings is set against the test table and the test bar is in the middle of the coil, in order not to affect the accuracy of the instrument

5. 4. Make sure there is a good contact between the coil lead wires and the wire clips.

5. 5. Prevent the test sensor from any collision and rotate it within approx. 45°avoid any damage.

5. 6. The test sensing assembly has been calibrated by using a special instrument and shall not be dismounted or modified without authorization, otherwise it will affect the measurement accuracy.

VI. Complete set of the Instrument

6. 1. KX-901 Type Coil Turns Measuring Instrument	1 set
6. 2. Power Cord	1 piece
6. 3. Measuring Line	1 pairs
6. 4. Operating Instructions	1 copy
6. 5. Certification	1 copy

VII. Storage and Warranty Period

7. 1. The product shall be stored with its original package in an indoor environment with an ambient temperature of 0~40°C and a relative humidity of not greater than 85%, and free of any hazardous substances in the air which content is enough to cause corrosion.

7. 2. The manufacturer shall provide a warranty service free of charge for any and all quality defects or malfunctions found in the product and its accessories within 18 months from the date of delivery if the user has fully observed the requirements on storage, installation and operation stipulated in the User Instructions provided by the manufacturer and the product seal is intact.

VIII. Common Faults and Elimination

No display or only one Nixie tube lights	1. Check if the power socket and the fuse are in normal
	2. Check according to each group of voltage marked on the power socket bracket, if not, repair the power supply
	3. Check pins (30) on main board AT89S52, if there is no high frequency impulse, replace the crystal oscillator 20MHz at main board AT89S52.
	4. Check if the pin between the display panel and the main board is plugged well.
Display instability	1. The sensor shall be plugged properly with good contact. For discrete type, check if the two connecting wires are broken.
	2. Check whether the sensor works well
	3. Check if the steel tube of the sensor is connected well with the machine grounding wire or the enclosure
Breaking light constantly on	1. Check if the output clamp is broken
	2. Check if the printed board of the heat sink is broken
	3. Check if the machine plug-ins are loose or jumped out
	4. If the discrete connecting wire is disconnected.
Shell-touching lamp constantly on	1. Check if the clamp wire touches the enclosure or the stainless steel tube
	2. Check if the printed board of the heat sink is broken
	3. Check is the resistance 5.1Ω-0.5W of enlarge board is broken.
Big error	1. If the sensor is matched with the machine
	2. Whether the sensor works well
	3. If related measuring conditions comply with other precautions

IX. Additional remarks to the coil testing instrument

9. 1. Within 300 turns, KX-901 instrument shall not have any error
9. 2. As shown in Fig. 9-1, Fig. 9-2 (the lead has been pass through the testing door) , it is one turn
9. 3. As shown in Fig. 9-3 (the lead is equal to not pass through the testing door), it is 0 turn, and when testing more turns, the total turns like this case shall be one turn less.

According to the above principle, the wire clamping position shall be notes.

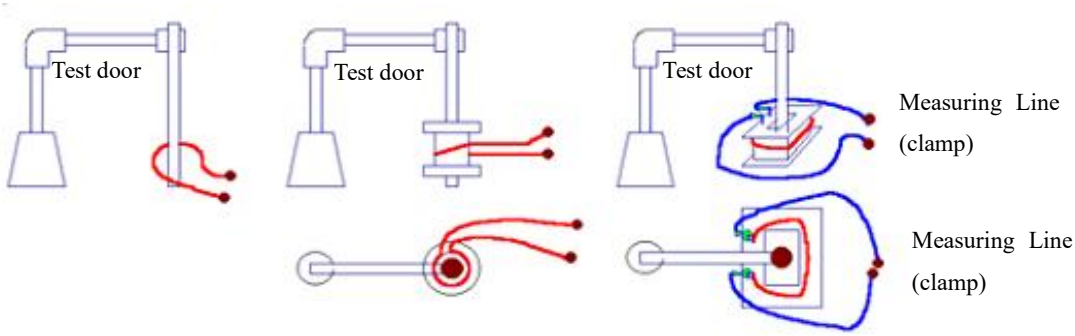

Fig.9-1 **Fig. 9-2** **Fig. 9-3**

X. Use ohmmeter to measure the normal sensor

10.1 Use ohmmeter to measure the integrated normal sensor (Fig. 10-1)

a. Three stainless steel tubes shall be connected with each other and connected with pins (2, 3, 4 and 5) of the sensor.

b. Te resistance of pins(1, and 10) and pins (6, 7, 8, and 9) of the sensor shall be 8——15KΩ or so.

c. The resistance of pins (12, 13, 14, and 15) and pins (16, 17, 18, and 19) shall be several hundreds of Ω or so.

10.2 Use ohmmeter to measure the discrete normal sensor (Fig. 10-2)

a. Three stainless steel tubes shall be connected with each other and be connected with pin (3) of the 3-core terminal.

b. The resistance between three pin (1) and pin (2) is about 8——15KΩ.

c. The resistance between 4-core terminal pin (1) and pin (2) of the sensor is about several hundreds of Ω.

When the above conditions are satisfied and the mutual resistances are infinite, it shows that the sensor is good, note that the potentiometer in the sensor is adjusted with special equipment and shall not be rotated when repair.

When there is fault in case of “a”, check if the spring clamping sheet is contacted well.

When there is fault in case of “b” and “c”, the sensor can not be repaired and only replaced

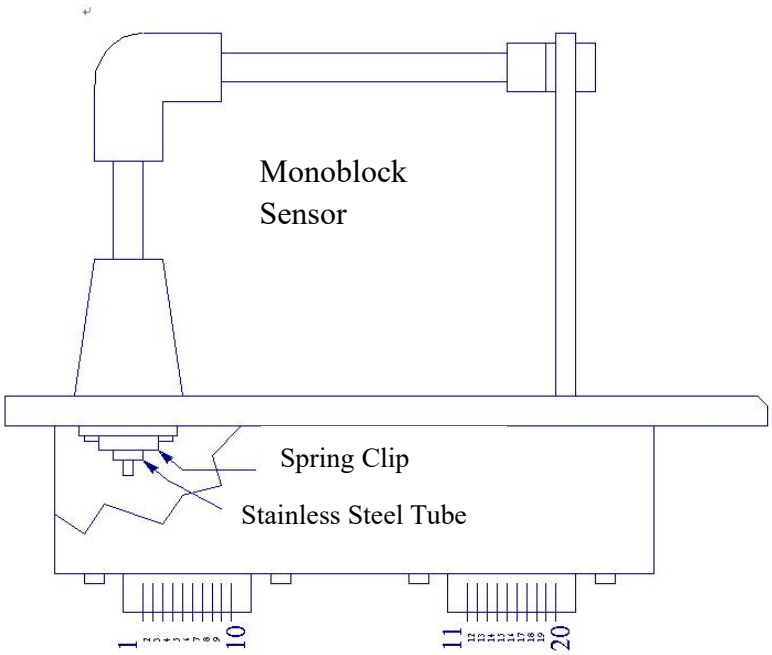

Fig. 10-1

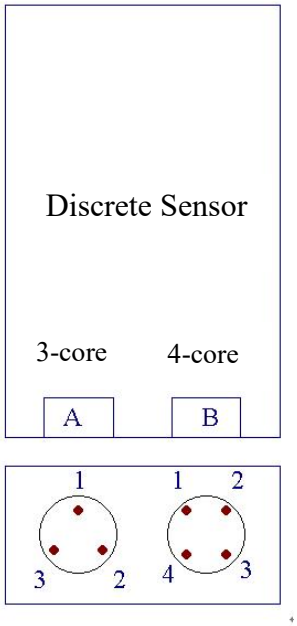

Fig. 10-2

When the above conditions are satisfied and the mutual resistance is infinite, it shows that the sensor is good, and note that the potentiometer in the sensor is adjusted by the special equipment and shall not be rotated when repair.

★When there is fault in case of “a”, check if the spring clamping sheet is contacted well.

★When there is fault in case of “b” and “c”, the sensor can not be repaired and only replaced

I. Overview

Instrument KX-901RH for coil turns is added with resistance measuring device on the basis of KX-901, it can not only conveniently measure the coil turns but also measure the coil resistance. The instrument does not need to replace the stroke when measuring the resistance fast and high efficiency.The shape and size of the coil have little influence on the measuring accuracy. From 0 to 60000 laps without range transformation can be accurately measured, thus improving the convenience of use and increase the life of the instrument.

II. Features

●The microprocessor controls all functions mathematically
●Simple operation, no range conversion automatic display of the number of turns or resistance measured
●With an accuracy of 0.2%
●5-bit direct-reading digital display
●Good value for money
●Wide Availability
●Measuring the size of the sensor, can be customized according to user needs

III. Main Technical Index

SPECIFICATIONS				
Model	KX-901RH-10	KX-901RH-6	KX-901RH-4	KX-901RH-X
Inner diameter	Φ>10mm	Φ>6mm	Φ>4mm	Special Size: Inner <4 mm, H >110 mm. special size accuracy and range please refer to KX-901 Chart. CoilH>110mm, outer>120mm. separate type
Outside diameter	Φ<120mm			
Height	H<110mm			
Sensor specification	Φ10	Φ6	Φ4	
Range	0~60000turns			
Accuracy	0~300 turns ± 0 turns 300~500 turns ± 1 turns 500~20000 turns ± 0.2% turns 20000~60000 turns ± 0.5% turns			
Speed	Fast 3/sec. Slow 1.2/Sec.			
Size	About 370×220×110（mm）			
Weight	About 10 kgs			
Resistance measurement accuracy	± 0.2% (0.1 Ω~100KΩ)			
Resistance measurement range	0.00001 Ω~100KΩ			

IV. Usage Method

4.1 The instrument is measured by the four-wire resistance method, and the M and N resistance is shown in Figure 1 Line resistance and contact resistance are irrelevant.

4.2 When the resistance is required to be measured, press the "Function Selection" key to make the "" light or "kΩ" light on, and the instrument can be measured by The measured resistance value size automatically selects the measuring range for measurement.The digital display value is the measured resistance value with its range unit "" (ohm) or "kΩ" (1000 ohm).

4.3 If you need to switch to the loop number measurement, just press the "Function Selection" key again to make the "ring" light turn on.See the YG108 model for other operations.

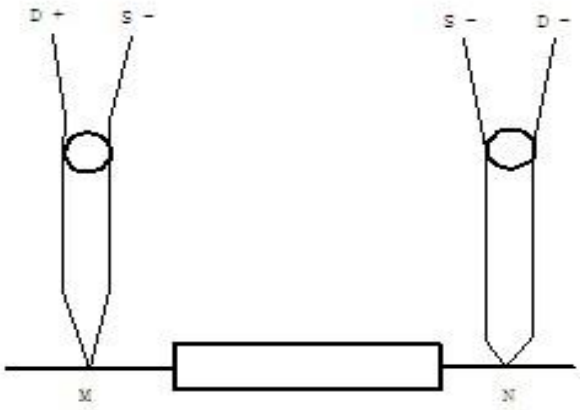

PRACTICAL APPLICATION :

Training for Customers on KX-901 EI Transformer Coil Measuring Instrument Operation

1.All our service engineers, with over 10 years of experience, have received specialized technical training—including in-depth expertise in the KX-901 EI Transformer Coil Measuring Instrument—enabling them to efficiently resolve various operational issues and technical problems specific to this measuring equipment.

2.We provide detailed guidance on the accurate operation and maintenance of the KX-901 EI Transformer Coil Measuring Instrument, while also offering free consultations on electronic product production process technologies related to EI transformer coil measurement and quality control.

3.To ensure the KX-901 EI Transformer Coil Measuring Instrument functions normally, we offer comprehensive training on its operation, measurement procedures, usage, and maintenance through English manuals, model-specific instructional videos, and dedicated online guidance tailored to this equipment.

PACKAGING:

Packaging Material: Carton/Wooden case with foam inside.

1.General package(Paper carton or plastic bag): For small euipped parts for Toroidal Transformer Winding Machine , Package it with form and pack paper to guarantee unbroken during the transport.

2.Wooden case package: For larger scale Toroidal Winding machine ,we have special skilled carpenter, who would make the proper wooden case with exact thickness,density,length. The up arrow ↑marked on the outer wooden case. Buffer material would be put in the wooden case to prevent crack and shock.

FACTORY:

We—KIOXIA LIGHT RING EQUIPMENT GROUP CO.,LTD.—have been experts in winding machine lines for 28 years, with our product portfolio extending to precision testing equipment like the KX-901 EI Transformer Coil Measuring Instrument — a specialized tool designed for accurate measurement of EI transformer coils, complementing our comprehensive range of winding solutions with reliable quality control capabilities.

Our KIOXIA LIGHT RING brand is backed by authoritative certifications and recognitions: ISO9001:2015 certification, CE approvals, multiple machine patents, and the official title of "high-tech enterprise" by the government. These credentials not only validate the precision and reliability of products like the KX-901 EI Transformer Coil Measuring Instrument but also underscore our commitment to delivering complete, high-quality solutions for the winding and testing needs of the transformer industry.